Safety sensor
BZ 16-03F IP69 Extreme
Material no.: 1355632

Product features

- Version with higher degree of protection IP69: suitable for cleaning with 80 °C hot water at 100 bar pressure at a distance of 100 mm from different directions
- Thermoplastic enclosure
- Long life
- Differential inputs: Induction / magnetic operating principle
- Internal monitoring, high manipulation protection
- Potential-free outputs
- Signalling contact
- Status LED
- 3 NC contacts
- Actuating plane: actuating from the front "F"
- Rated switching distance s_n = 12 mm
- Wiring compartment

Notes

- The actuator is not included in the delivery of the switches
- 1 cable gland M20x1.5 - IP69 and 2 locking screws M20x1.5 included in delivery

Dimensions

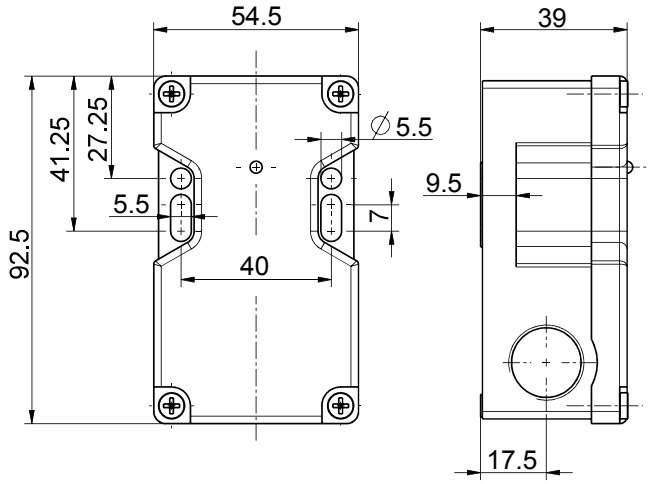

General technical data

Applied standards
EN 61000-6-1, EN 61000-6-2, EN 61000-6-3, EN 61000-6-4, EN 60947-5-2, EN 60947-5-3, EN ISO 14119, EN 60204-1, EN ISO 13849-1, EN 62061, 2004/108/EG

Enclosure
thermoplastic, glass-fibre reinforced, shockproof, self-extinguishing UL 94 V-0

Sensor type
type 4 interlocking device

Coding level
low coding

Tightening torque
enclosure mounting screws: max. 2 Nm
cover screws: max. 1.5 Nm
actuator screws: max. 2 Nm

Degree of protection
IP69 (IEC/EN 60529)

Rated switching distance s_n
12 mm (10 mm with flush mounting)

Assured switching distance »ON« s_{ao}
10 mm (8 mm with flush mounting)

Assured switching distance »OFF« s_{ar}
25 mm

Hysteresis
approx. 6 mm

Sideways tolerance
≤ 3 mm

Repeatability
± 1 mm

Rated operating current/voltage I_e/U_e
140 mA/24 VDC ± 15 %
(reverse voltage protected);
output contacts: max. 3 A/24 VAC/DC, min. 10 mA/5 VAC/DC;
signalling contact: max. 1 A/24 VAC/DC, min. 100 µA/100 mVDC

No-load supply current I_0
≤ 70 mA

Short-circuit protection
U_e: 0.25 A (slow blow);
output contacts: 4 A (gG/gN) incoming series-connected

Outputs
2 enabling paths (2 NC)
1 signalling contact (1 NC)

Switching voltage
max. 30 VAC/DC

Conditional short-circuit current
100 A

Utilisation category
AC-15; DC-13 (output contacts)
AC-12; DC-12 (signalling contact)

Errors and omissions excepted.

Safety sensor
BZ 16-03F IP69 Extreme
Material no.: 1355632

General technical data (contd.)

Rated insulation voltage U_i
250 VAC

Rated impulse withstand voltage U_{imp}
1.5 kV

Voltage drop at I_e
max. 0.6 V

Overvoltage category
III

Switching frequency
max. 1 Hz

Attendance delay t_v
< 300 ms

Risk time
max. 165 ms

Degree of pollution
3

Ambient temperature
0 °C ⋯ +55 °C

Storage and shipping temperature
–20 °C ⋯ +70 °C

Mechanical life
50 mio. operations

Contact material
output contacts: AgSnO self-cleaning, positive-guided; signalling contact: AgNi, gold-plated

Contact resistance
output contacts: 100 mΩ in new condition; signalling contact: max. 30 mΩ

Connection
wiring compartment with socket screw clamps 8-pole

Cable entry
3 x M20 x 1.5 (press-out blanks in enclosure)

Cable cross-section
min. 0.14 mm^2 (AWG 28), max. 1.5 mm^2 (AWG 16)

Weight
240 g

Safety-relevant data

EN ISO 13849-1
Performance Level PL e

Category
3

B_{10d} (10 % load)
20 million

T_M
max. 20 years

$MTTF_d$
100 years

DC/DC_{avg}
96 %

EN 62061
SIL CL 3

PFH_d
$\geq 4.29 \times 10^{-8}$ 1/h

h_{op}
8 h/day

d_{op}
220 days/year

t_{zyklus}
20 s

Note
The safety-related data are based on a load of 24 V / 0.1 A / DC-1 for the enabling paths. With higher load currents for the enabling paths and other requirement rates n_{op}, the safety-related data vary from the given data and can be provided on request.

Errors and omissions excepted.

Safety sensor
BZ 16-03F IP69 Extreme
Material no.: 1355632

Contact diagram

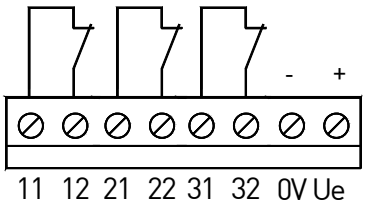

Actuating planes

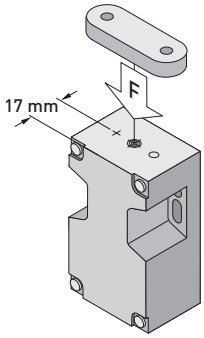

Axial misalignment

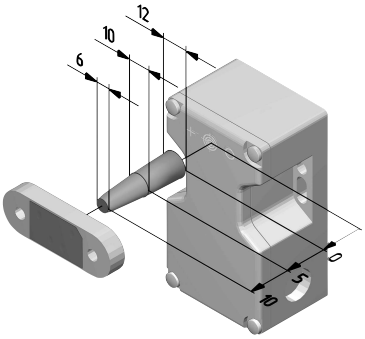

Approach from side

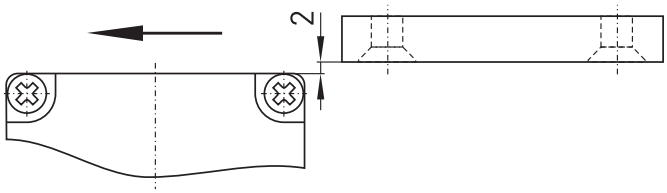

Minimum distance 2 mm for approach from side.

Errors and omissions excepted.