Medical rocker foot switch
WF-MED
Material no.: on request

Product features

- Rocker switch for rapid switching between two functions
- Robust powder-coated die-cast zinc foot control
- Waterproof: IPX8 (IEC 60529)
- Digital or analogue output signals available

Notes
- Photo shows optional accessories

Dimensions

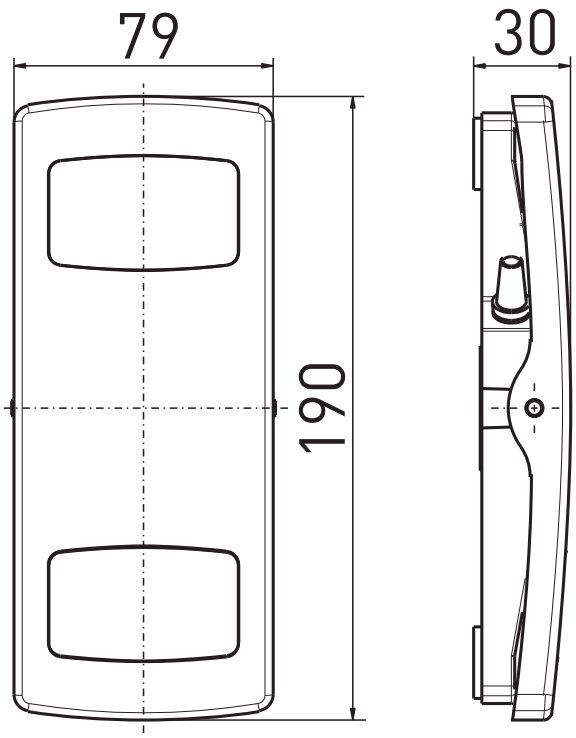

Technical data

Applied standards
IEC 60601-1, ANSI/AAMI ES60601-1, IEC 60529

Pedal
GD-Zn alloy, RAL 7035

Pedal housing
thermoplastic, shockproof, self-extinguishing UL 94 V-0

Degree of protection
IPX8 (IEC/EN 60529)

Switching elements
reed contact / micro switch / Hall sensor

Switching system
1 – 2 NO contacts / 1 change-over / analogue output 0 ··· 10 VDC, 0 ··· 20 mA, 4 ··· 20 mA

Mechanical life
> 1 million operations

Connection
2 m cable, other lengths optionally available

Switching voltage
max. 25 VAC / 60 VDC

Switch-on current
max. 1 A

Switching capacity
Reed contacts: max. 20 VA, micro switch: max. 30 VA

Supply voltage Hall sensor
15 ··· 30 VDC / max. 25 mA

Errors and omissions excepted.

steute Technologies GmbH & Co. KG
www.steute-meditec.com
Brückenstraße 91
32584 Löhne, Germany
+49 5731 745-0
meditec@steute.com