Ex position switch
Ex 12 F - 10m
Material no.: 1189582 (material no. old: 12747307)

Product features

- Ex zone 1 and 21
- Metal enclosure, hard-coated
- Snap action, change-over contact with single break
- With pre-wired cable
- Actuator: Plunger for front mounting F
- Actuating speed max. 0.5 m/s with a vertical actuating angle of 0°
- Attention: Please state required international approvals with your order!

Dimensions

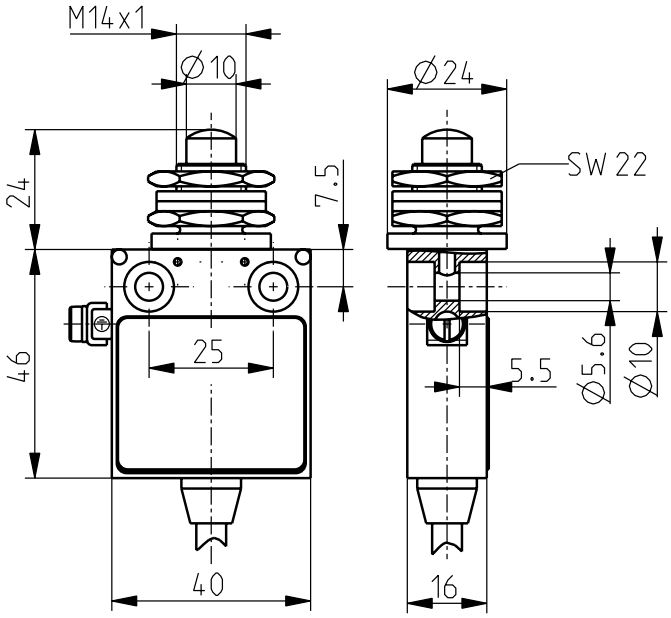

Technical data

Applied standards
EN IEC 60079-0, EN 60079-1, EN 60079-31, EN 60947-5-1

Enclosure
aluminium die-cast, hard-coated

Degree of protection
IP65 (IEC/EN 60529)

Contact material
silver

Switching system
snap action

Switching elements
1 change-over contact with single break, type C

Connection
pre-wired cable H05VV-F

Cable cross-section
4 x 0.75 mm² (incl. conductor ferrules)

Cable length
10 m

Rated impulse withstand voltage U_{imp}
4 kV

Rated insulation voltage U_i
250 V

Conventional thermal current I_{the}
5 A

Utilisation category
AC-15; DC-13

Rated operating current/voltage I_e/U_e
5 A/250 VAC; 0.16 A/230 VDC

Short-circuit protection
5 A gG/gN fuse

Ambient temperature
–20 °C ··· +60 °C

Mechanical life
> 1 million operations

Operation cycles
max. 1800/h

Repeat accuracy of switching points
± 0.1 mm

Impact energy
max. 7 J

Ex marking
Ⓔx II 2G Ex db IIC T6 Gb
Ⓔx II 2D Ex tb IIIC T80 °C Db
IECEx Ex db IIC T6 Gb
Ex tb IIIC T80 °C Db

Errors and omissions excepted.

Ex position switch
Ex 12 F - 10m
Material no.: 1189582 (material no. old: 12747307)

Technical data (contd.)

Approvals
PTB 03 ATEX 1067 X
IECEx PTB 11.0089X

Weight
895 g

Switching diagram

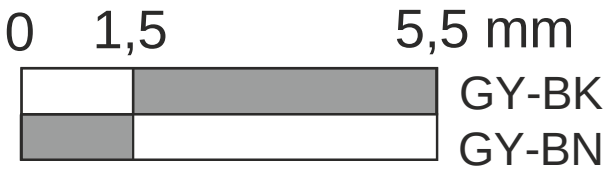
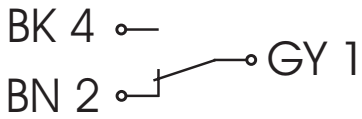
Contact diagram