Position switch
ES 13 TL-S 2Ö/1S - 5m
Material no.: on request

Product features

- Thermoplastic enclosure
- Double insulated ⧈
- Suitable for in-line mounting
- With pre-wired cable
- Cable entry on side
- Actuator: Long spring rod TL
- Spring rod can be actuated from any direction
- Spring rod can be shortened 30 mm in actuating area
- Exact linear actuation not necessary
- Elasticity of the spring allows for deflection above the max. switching angle of 18°

Dimensions

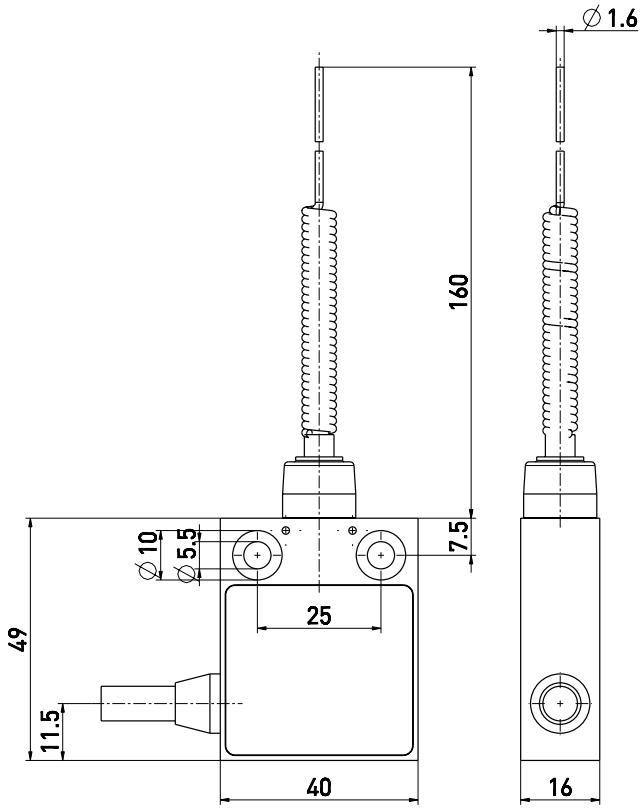

Technical data

Applied standards
EN 60947-5-1

Enclosure
thermoplastic, glass-fibre reinforced, shockproof, self-extinguishing UL 94 V-0

Tightening torque
enclosure mounting screws: max. 5 Nm

Degree of protection
IP67 (IEC/EN 60529)

Contact material
silver

Switching system
slow action

Switching elements
2 NC/1 NO contact, type Zb

Connection
cable 6 x AWG 20

Cable cross-section
6 x 0.56 mm²

Cable length
5 m

Rated impulse withstand voltage U_{imp}
4 kV

Rated insulation voltage U_i
250 V

Conventional thermal current I_{the}
6 A

Rated operating current/voltage I_e/U_e
6 A/250 VAC; 0.25 A/230 VDC; 4 A/24 VDC

Utilisation category
AC-15; DC-13

Short-circuit protection
6 A gG/gN fuse

Ambient temperature
–20 °C ⋯ +75 °C

Mechanical life
> 1 million operations

Errors and omissions excepted.

Position switch
ES 13 TL-S 2Ö/1S - 5m
Material no.: on request

Technical data (contd.)

Operation cycles
max. 1800/h

Repeat accuracy of switching points
± 0.1 mm

Contact opening
max. 2 x 3.5 mm

Approvals

Contact diagram

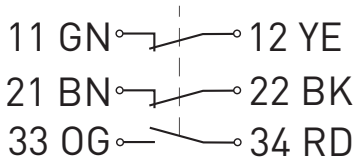

Switching diagram

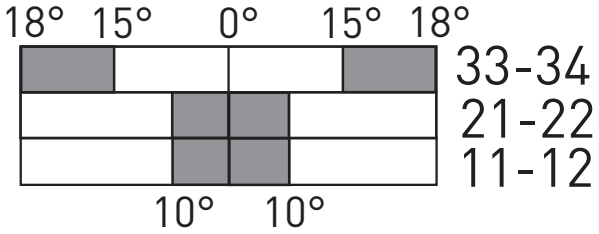

Errors and omissions excepted.