Emergency pull-wire switch
ZS 80 3Ö/1S WVD
Material no.: 1178758 (material no. old: 72942502)

Product features

- Metal enclosure
- 4 contacts
- Position indicator and integrated emergency-stop push button
- Wire length up to 100 m
- Spring force variant: 100 N
- Lever for release and position indication
- Watertight collar
- Wire pull and breakage detection

Notes
- At 5 m distance intermediate wire supports are required. One wire thimble is provided.

Dimensions

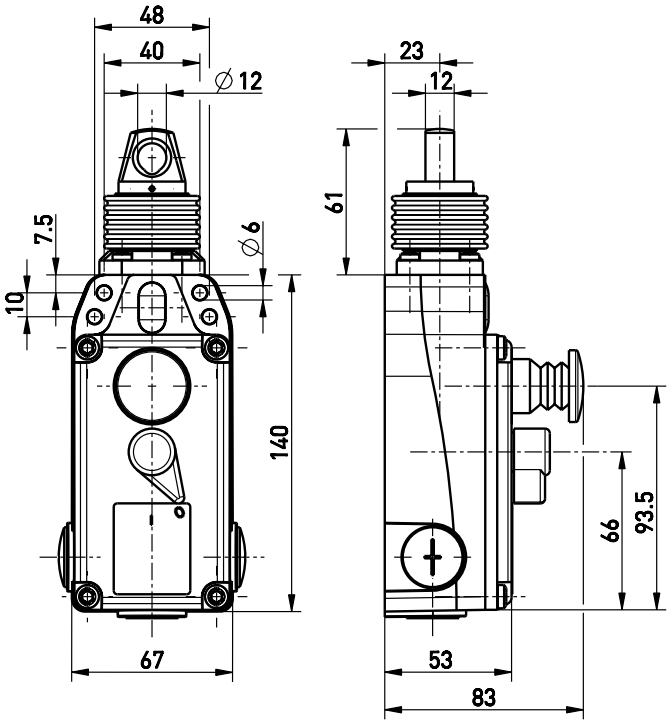

Technical data

Applied standards
EN 60947-5-1, EN 60947-5-5, EN ISO 13850, EN ISO 13849-1

Enclosure
aluminium die-cast, powder-coated

Cover
thermoplastic, glass-fibre reinforced, shockproof, self-extinguishing UL 94 V-0

Tightening torque
cover screws: 2.4 Nm

Degree of protection
IP67 (IEC/EN 60529)

B_{10d} (10 % load)
200 000

T_M
max. 20 years

Contact material
silver

Switching elements
3 NC/1 NO contacts, type Zb

Switching system
slow action, positive break NC contacts ⊖

Connection
2 x 4 pole terminal block

Cable cross-section
max. 2.5 mm² (incl. conductor ferrules)

Cable entry
3 x M20 x 1.5

Rated impulse withstand voltage U_{imp}
2.5 kV

Rated insulation voltage U_i
250 V

Conventional thermal current I_{the}
2 A

Utilisation category
AC-15; DC-13

Rated operating current/voltage I_e/U_e
2 A/250 VAC; 0.25 A/230 VDC; 2 A/24 VDC

Short-circuit protection
2 A gG/gN fuse

Ambient temperature
–25 °C ··· +70 °C

Errors and omissions excepted.

Emergency pull-wire switch
ZS 80 3Ö/1S WVD
Material no.: 1178758 (material no. old: 72942502)

Technical data (contd.)

Mechanical life
> 100 000 operations

Max. wire length
100 m

Approvals

Weight
696 g

Switching diagram

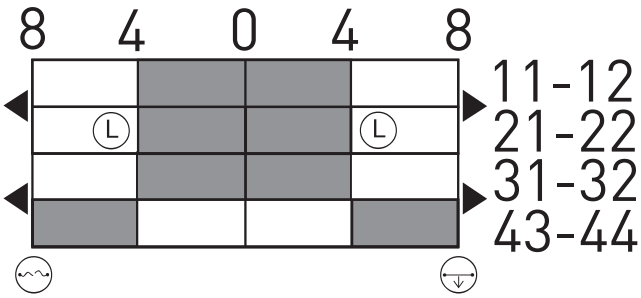

Ⓛ Latching point
Wire breakage detection
Wire pull detection

Contact diagram

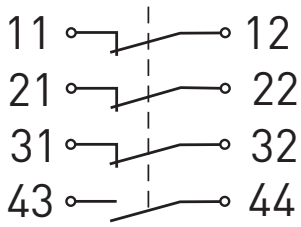

Errors and omissions excepted.